CINTEC

Stabilization of Retaining Walls

John Brooks – Technical Consultant

Patrick J Morrissey – Area Representative

CINTE

Anchor Inflation

CINTE

Cintec Sock Inflation

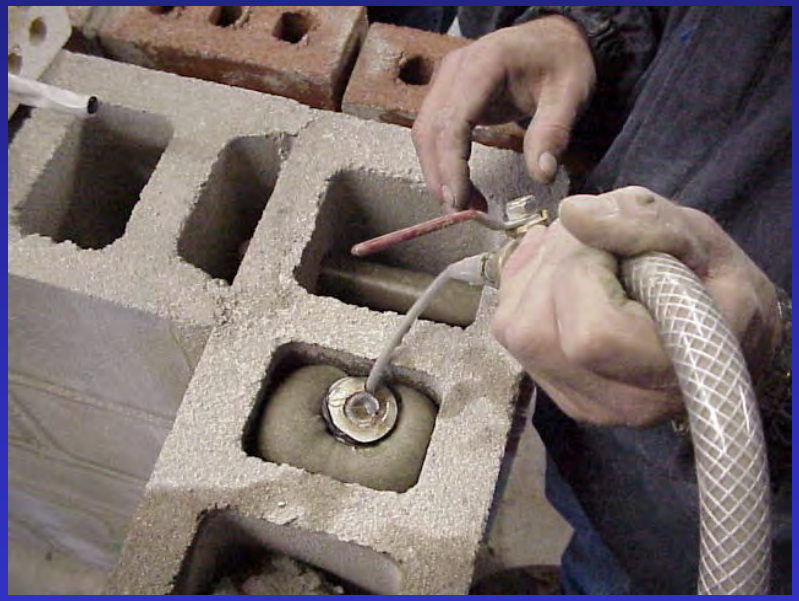

CINTE

Buckfast Abbey

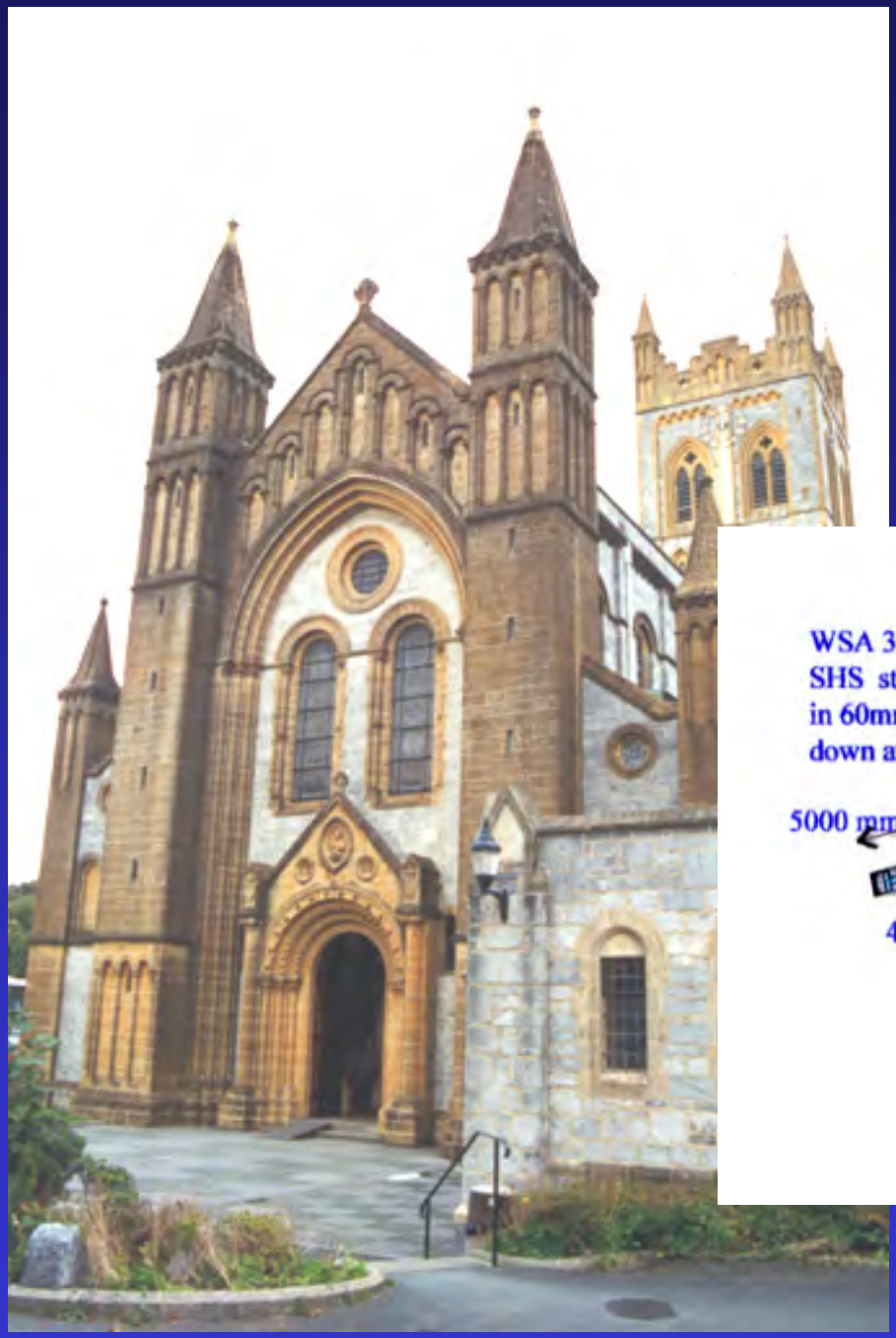

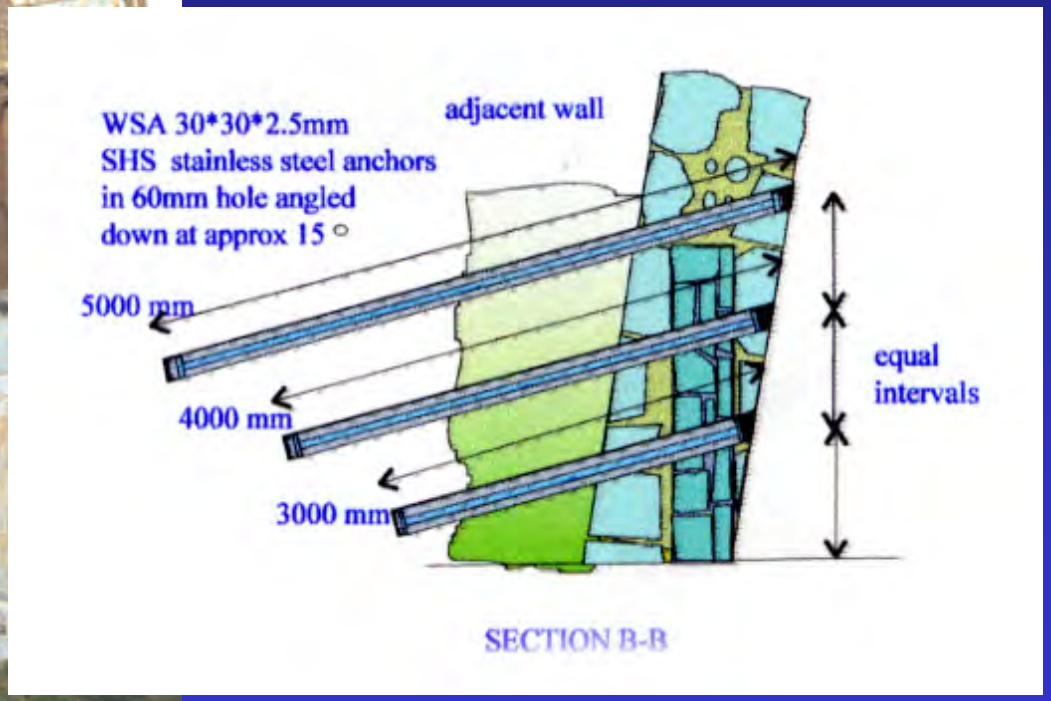

CINTE

Malmesbury Town Wall

The 12th Century Town Wall at Malmesbury in Wiltshire has been restored as part of an ongoing conservation project involving the Conservation Department of North Wiltshire District Council in conjunction with English Heritage.

The random rubble wall is constructed from locally quarried limestone up to 1.50 meters in thickness, however erosion of adjoining earth and the effects of time had taken their toll resulting in localized delamination and rotation.

Malmesbury Town Wall

CINTE

Malmesbury Town Wall

CINTE

Nantgarw Pottery Works

CINTE

Nantgarw

CINTE

Conventional Strengthening vs Internal Post-Tensioning

In the normal course of events, deep raking out and repointing of the mortar joints using a stronger cementitious material is the most straightforward refurbishment. The lateral bending strength of the wall can be raised some 70 per cent using this method. Strengthening is sometimes carried out by bolting vertical channel-section steel girders. Cintec Internal Post Tensioning provides an alternative solution.

CINTE

Conventional Strengthening vs Internal Post-Tensioning

Little Ness

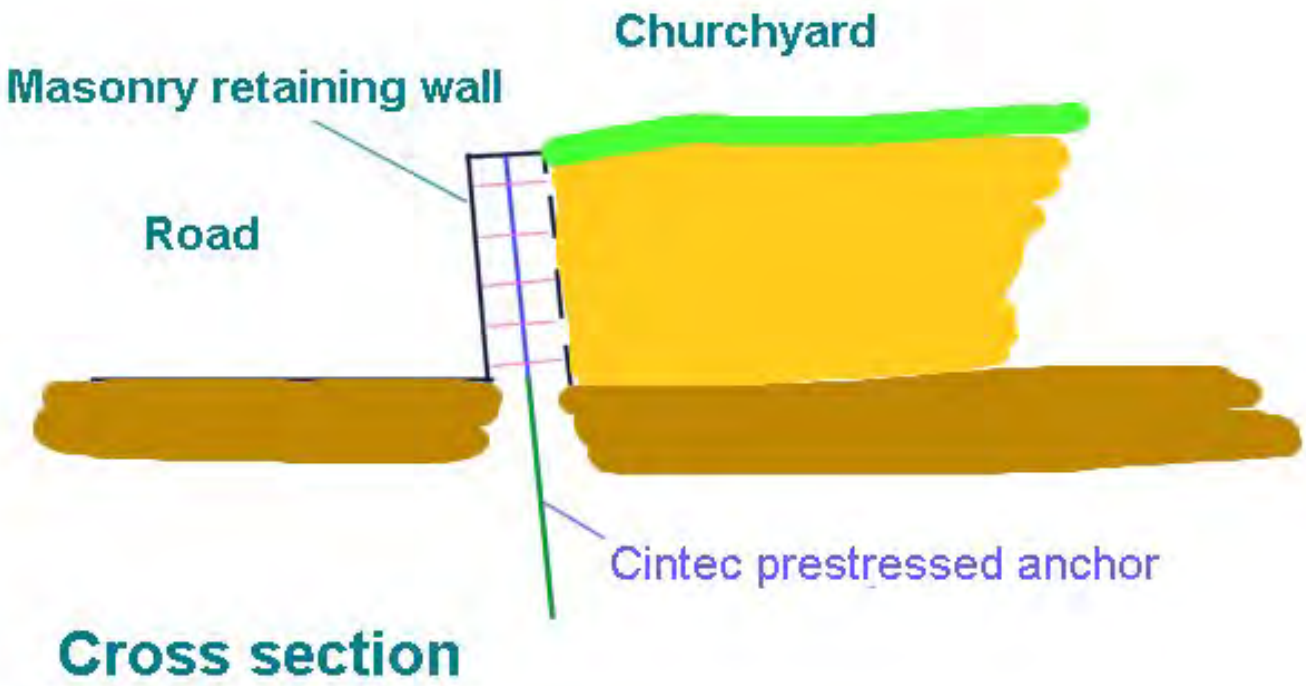

CINTE

CINTE

CINTE

CINTE

CINTE

CINTE

CINTE

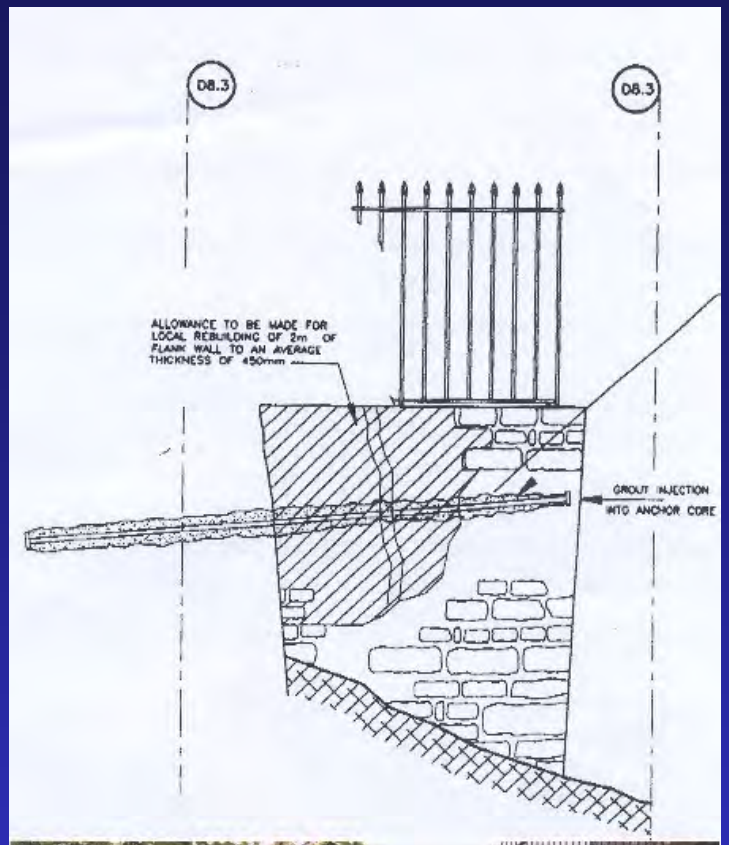
D8.3
D8.3
ALLOWANCE TO BE MADE FOR LOCAL REBUILDING OF 2m OF FLANK WALL TO AN AVERAGE THICKNESS OF 450mm
GROUT INJECTION INTO ANCHOR CORE

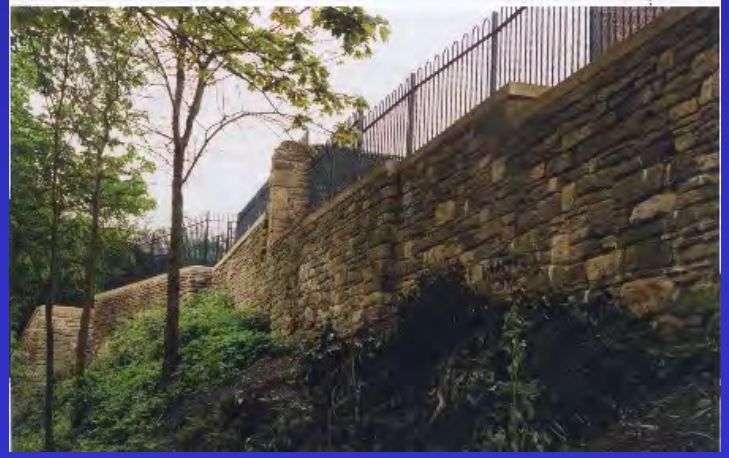

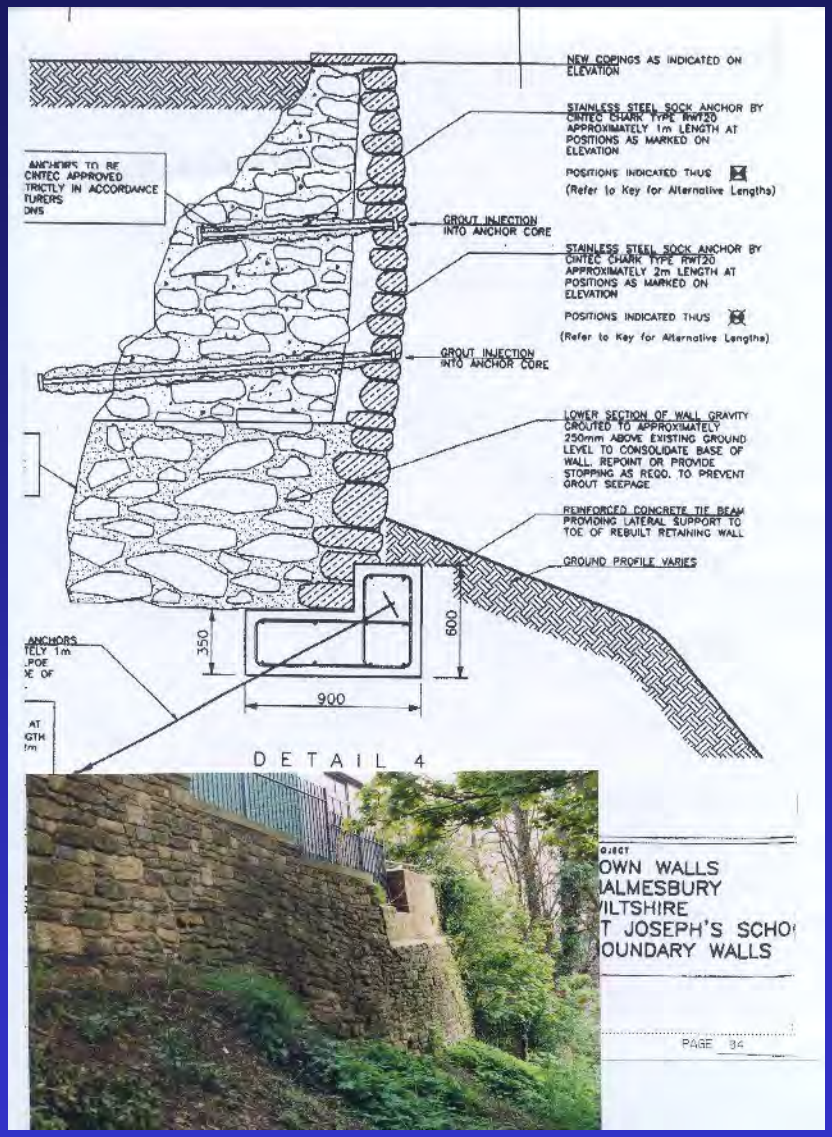
NEW COPINGS AS INDICATED ON ELEVATION
STAINLESS STEEL SOCK ANCHOR BY CINTEC CHARK TYPE RWT20 APPROXIMATELY 1m LENGTH AT POSITIONS AS MARKED ON ELEVATION
POSITIONS INDICATED THUS
(Refer to Key for Alternative Lengths)
GROUT INJECTION INTO ANCHOR CORE
STAINLESS STEEL SOCK ANCHOR BY CINTEC CHARK TYPE RWT20 APPROXIMATELY 2m LENGTH AT POSITIONS AS MARKED ON ELEVATION
POSITIONS INDICATED THUS
(Refer to Key for Alternative Lengths)
GROUT INJECTION INTO ANCHOR CORE
LOWER SECTION OF WALL GRAVITY GROUTED TO APPROXIMATELY 250mm ABOVE EXISTING GROUND LEVEL TO CONSOLIDATE BASE OF WALL. REPOINT OR PROVIDE STOPPING AS REQD. TO PREVENT GROUT SEEPAGE
REINFORCED CONCRETE TIE BEAM PROVIDING LATERAL SUPPORT TO TOE OF REBUILT RETAINING WALL
GROUND PROFILE VARIES
350
600
900
DETAIL 4
OWN WALLS
ALMESBURY
ILTSHIRE
T JOSEPH'S SCHO
OUNDARY WALLS
PAGE 34

CINTE

CINTE

CINTE

CINTE

CINTE

CINTE

Cintec Designed Anchor System

Some

Design Issues and Parameters

CINTE

Design Methods

- Cone pull-out resistance
- Tensile strength of the steel anchor body
- Shear strength of the steel anchor body
- Bond pull-out resistance
- Bearing resistance
- Shear resistance toward the free edge

CINTE

Design Parameters

- Base material in the anchor body SS Type 304 or 316
- Micro-fine Presstec grout - very high early strength
- SUBSTRATE!
- Anchor configuration

CINTE

Types of Substrate

- Terra cotta - in many forms
- Brick
- Hollow concrete block (CMU)
- Concrete
- Stone
- Adobe

Fire Resistance

Cintec anchors >4 hours

Epoxy melts at 80 dec. C

CINTE

Quality Control

- Hole is easy to inspect
- If anchor is rigid after installation , all is OK
- If anchor is loose, take it out and re-sock it.
- Mechanical anchors sometimes don’t set, but Contractor doesn’t fix it.
- Much grout is lost with un-socked rock anchors. (EPA problems!)

CINTE

Anchor Types

CINTE

Combi-Tec Concealed Top Termination

Developed by Cintec in conjunction with WT Anchor Systems, the Combi-Tec system comprises a stainless steel tube, front plate and polyester sock which is inserted over the installed anchor before pressure-filling with grout to produce a mechanical and chemical bond within the structure. This provides a totally concealed top termination for Duckbill ground anchors, making it ideal for historic and listed structures.

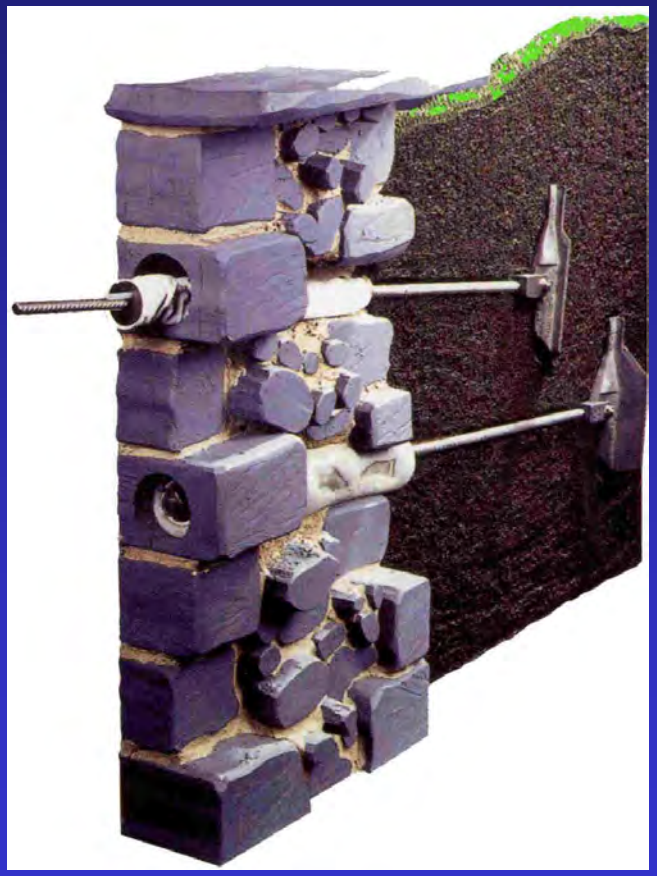

CINTE

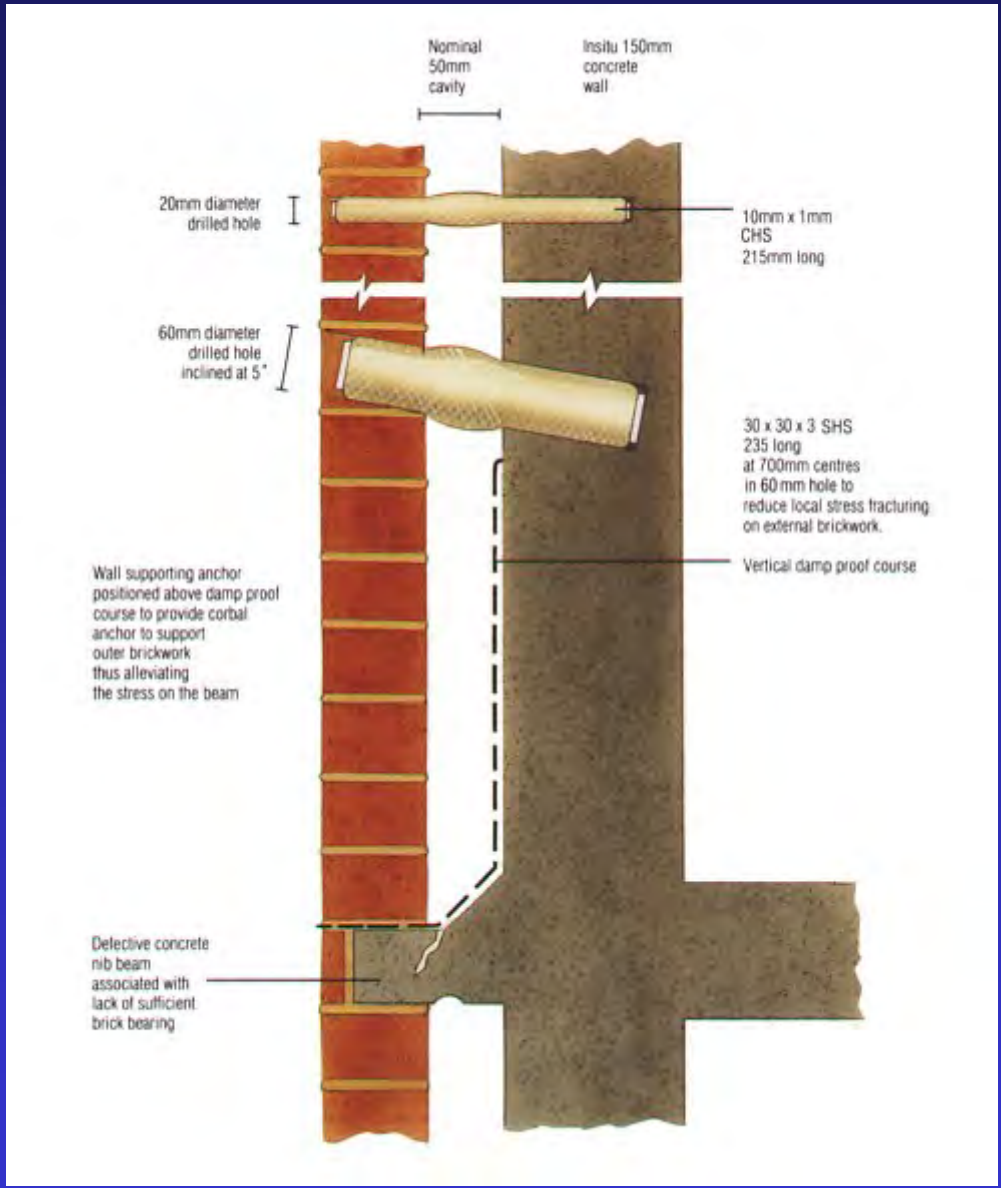
Nominal
50mm
cavity
Insitu 150mm
concrete
wall
20mm diameter
drilled hole
10mm x 1mm
CHS
215mm long
60mm diameter
drilled hole
inclined at 5°
30 x 30 x 3 SHS
235 long
at 700mm centres
in 60 mm hole to
reduce local stress fracturing
on external brickwork.
Vertical damp proof course
Wall supporting anchor
positioned above damp proof
course to provide corbal
anchor to support
outer brickwork
thus alleviating
the stress on the beam
Delective concrete
nib beam
associated with
lack of sufficient
brick bearing

CINTE

Rubble/Exterior Wall to Wood Joist

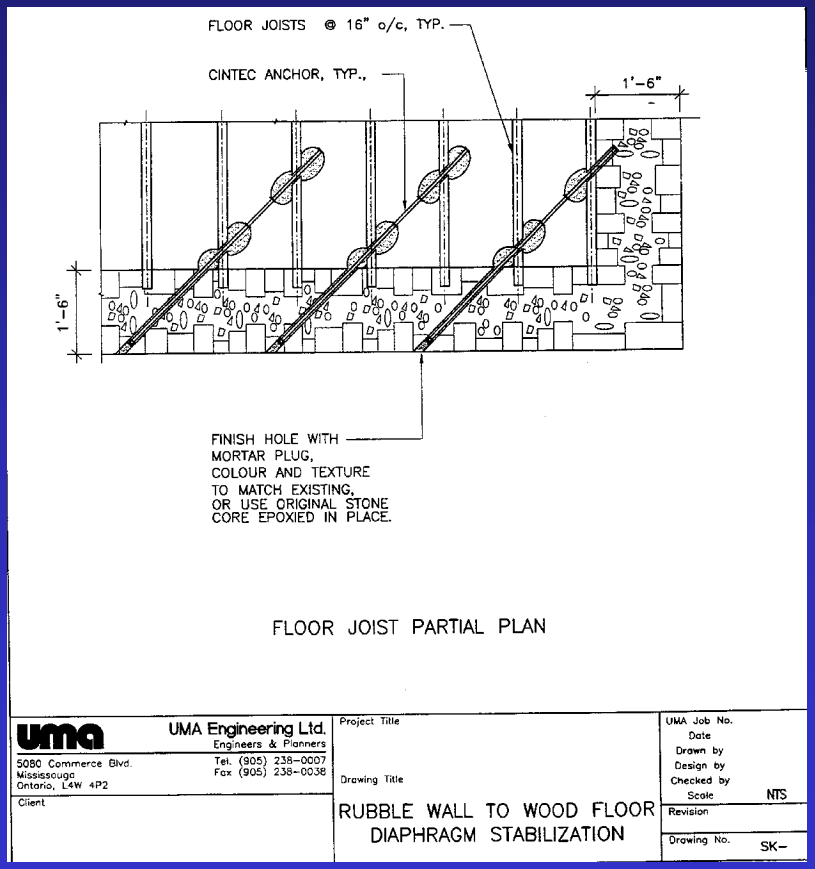

CINTE

High Parapet Stitching

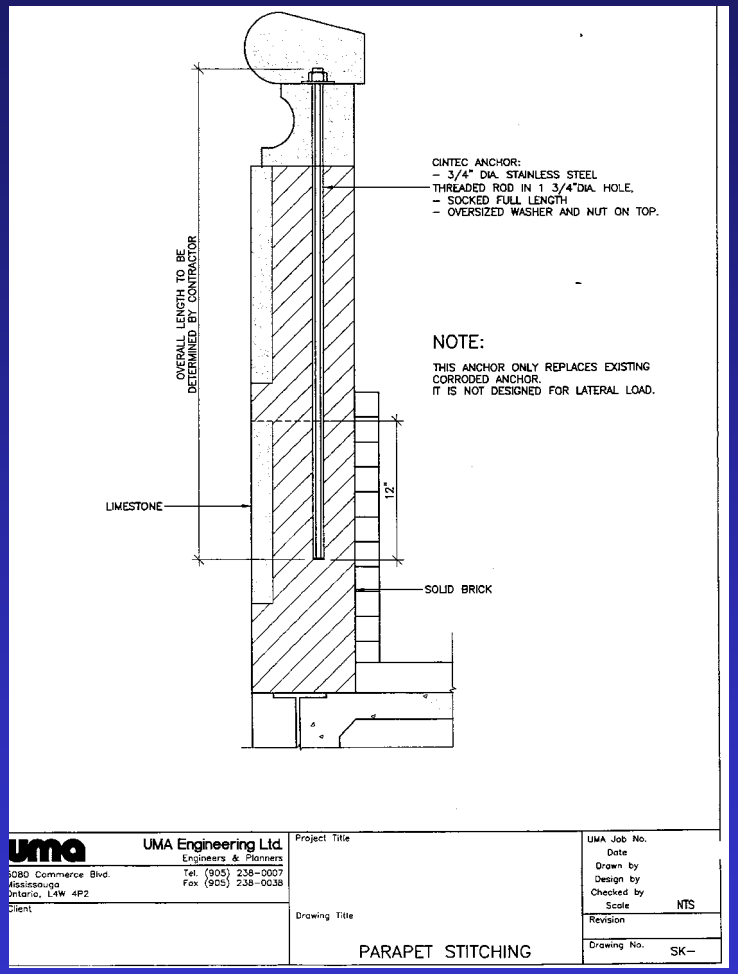

CINTE

Façade Stabilization 8-30’ Anchors

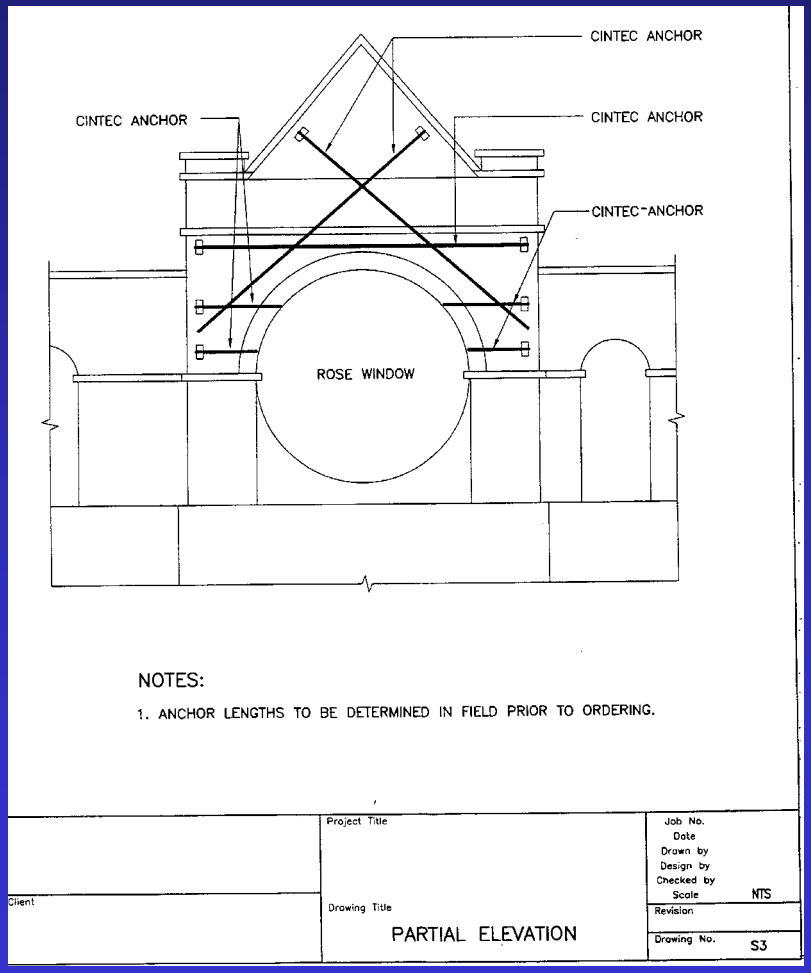

CINTE

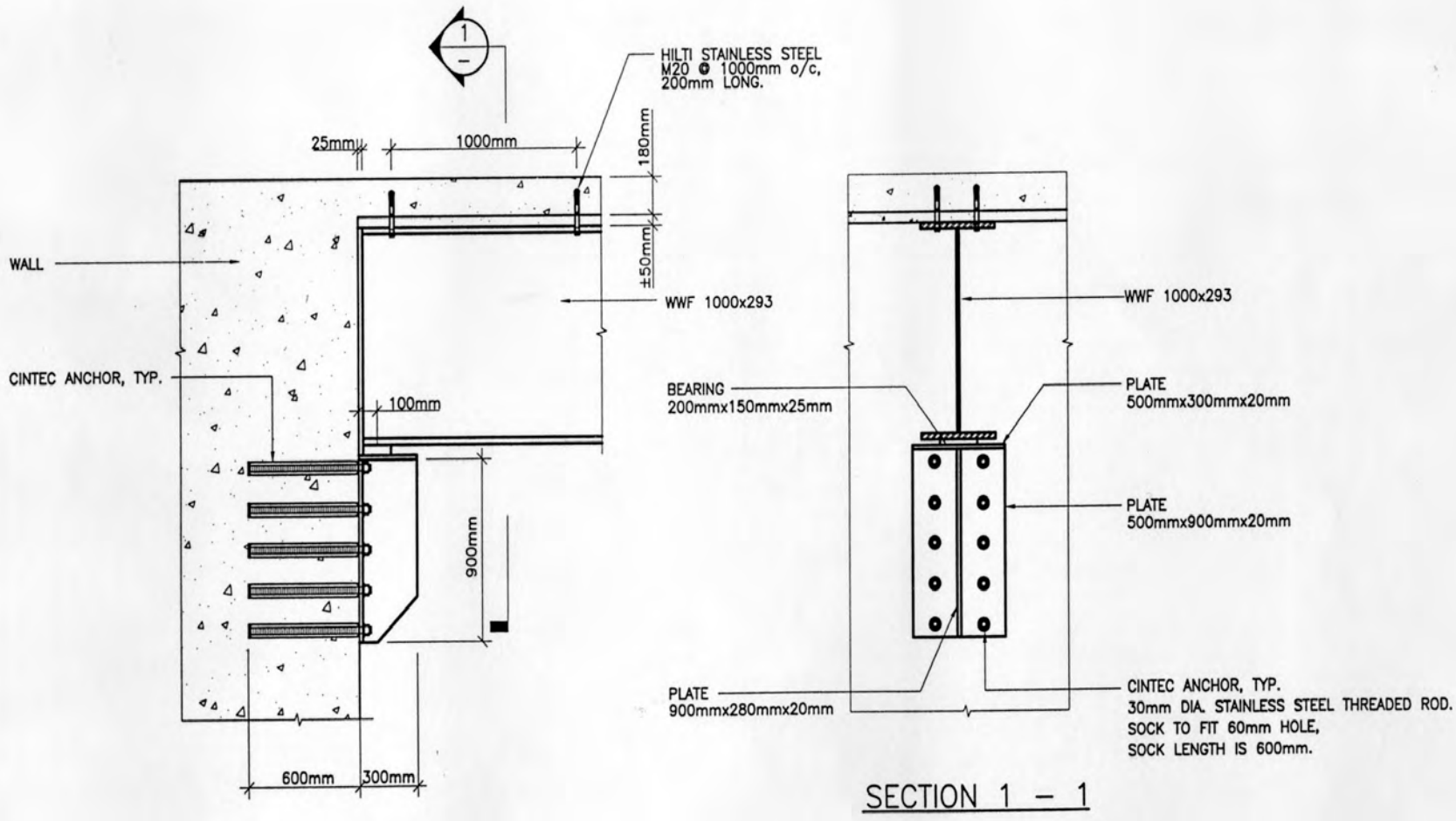

CONNECTION BETWEEN WALL AND NEW GIRDER

CINTE

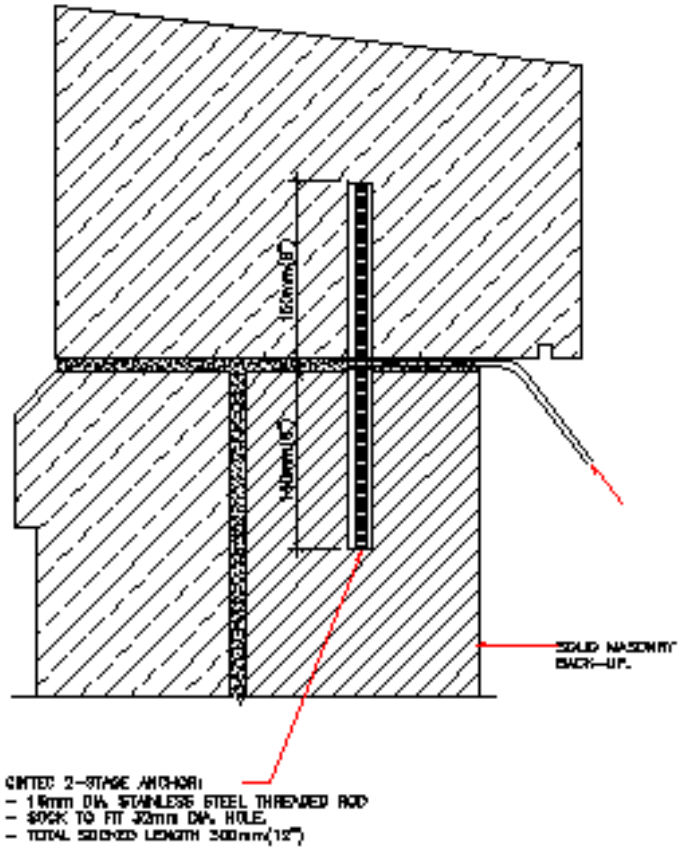

COPING STONE ANCHORS

CINTE

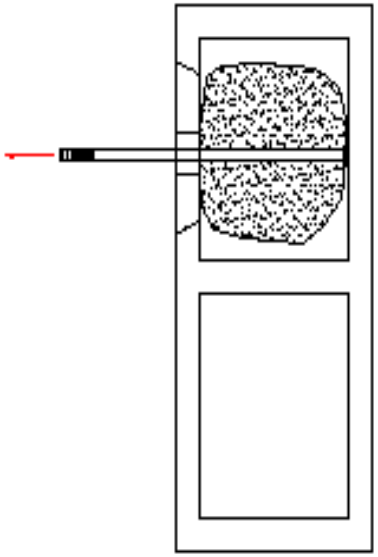

TERRA COTTA IN TENSION

CINTE

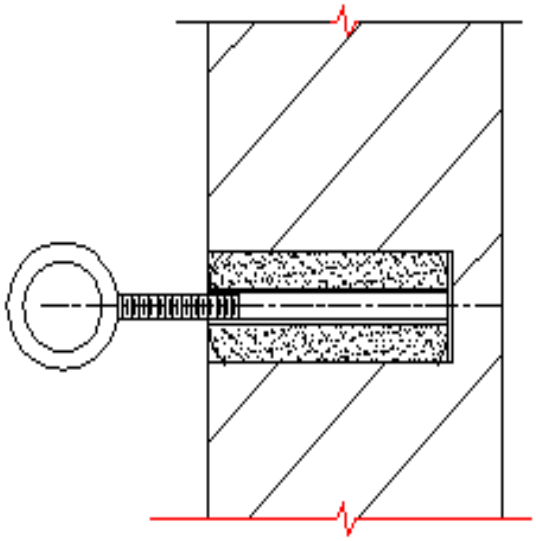

SPECIAL CONNECTION

CINTE

Design Challenges

- Terra cotta
- Substrate strength
- Cintec’s R&D

CINTE

CINTEC

CINTE